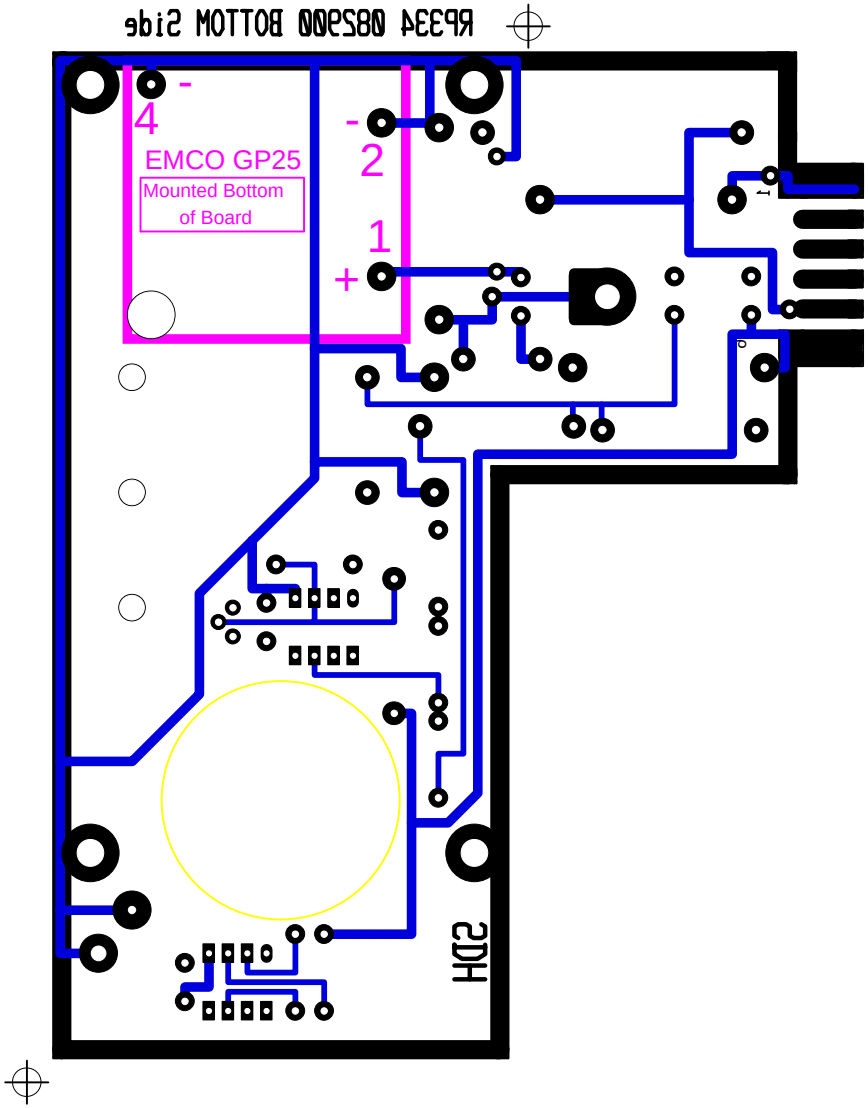
RF34 08290D BOTTOM Side
-
4
EMCO GP25
Mounted Bottom
of Board
-
2
1
+
1
2DH