REV.	DESCRIPTION	DRAWN / APPD.	DATE / DATE
A	ADDED ANGLE CLIPS & BOLTS #2 & 3 TO PROVIDE FOR OPTIONAL BOLTED STAND CONSTRUCTION.	R.J. PAULUS	6/12/86

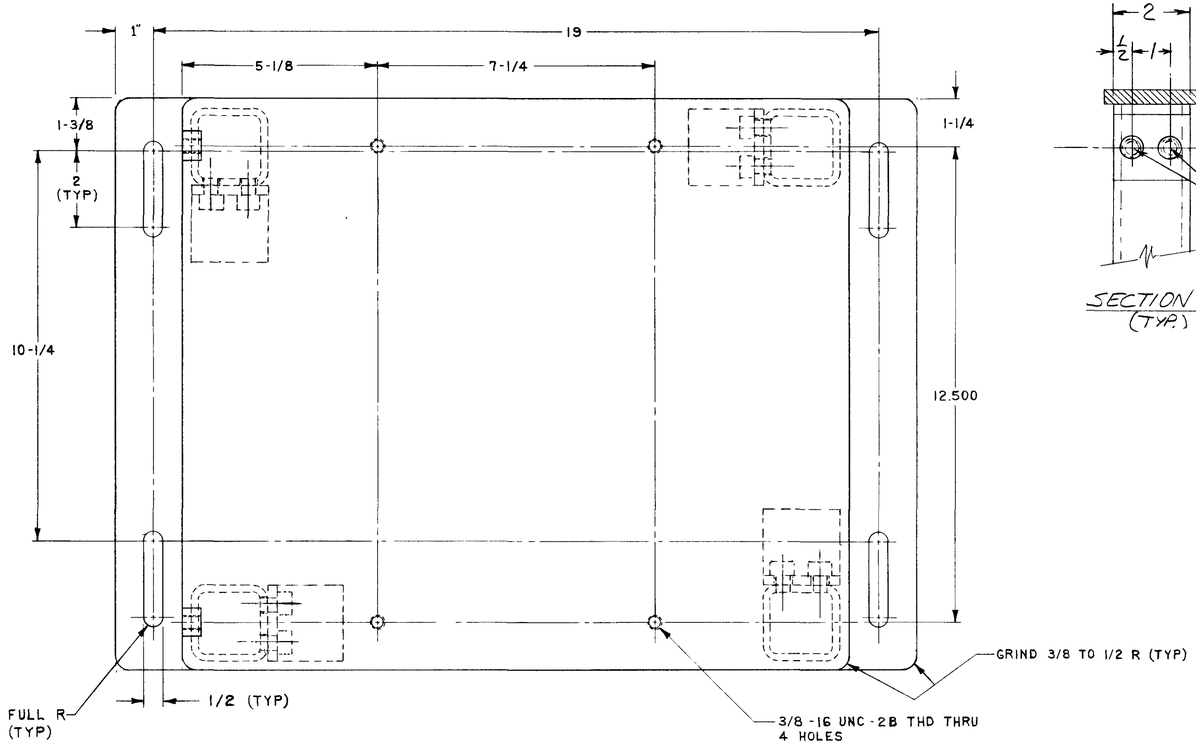

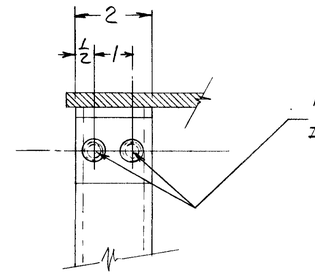

SECTION AA (TYP.)

A 13/32 ϕ DRILL IN ANGLE CLIP, ITEM #2 D&T 3/8-16UNC-2B IN ITEM #1 16-PLACES (FOR BOLTED LEGS ONLY)

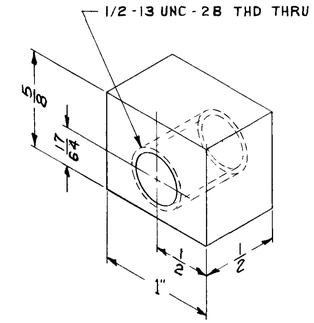

LINE	@ MAGNET	"L" =
AP-1	PQ2	12-7/8
	PQ3	32-1/2
	PQ5B	20-3/4
	PQ7A	11-3/4
AP-2	IQ6	16-1/4
	IQ10, IQ15 IQ23, IQ28	11
	IQ19	23
	IQ33	SPEC.
AP-3	EQ10, EQ14 EQ21	11
	EQ18	23
	EQ26	16 1/2
	EQ7	11 7/8
DEB	D4Q3	20 3/4

✳ LOCATE BY USING PARTS MD-188079 & MB-188078 AS SHOWN ON DWG. MD-188081

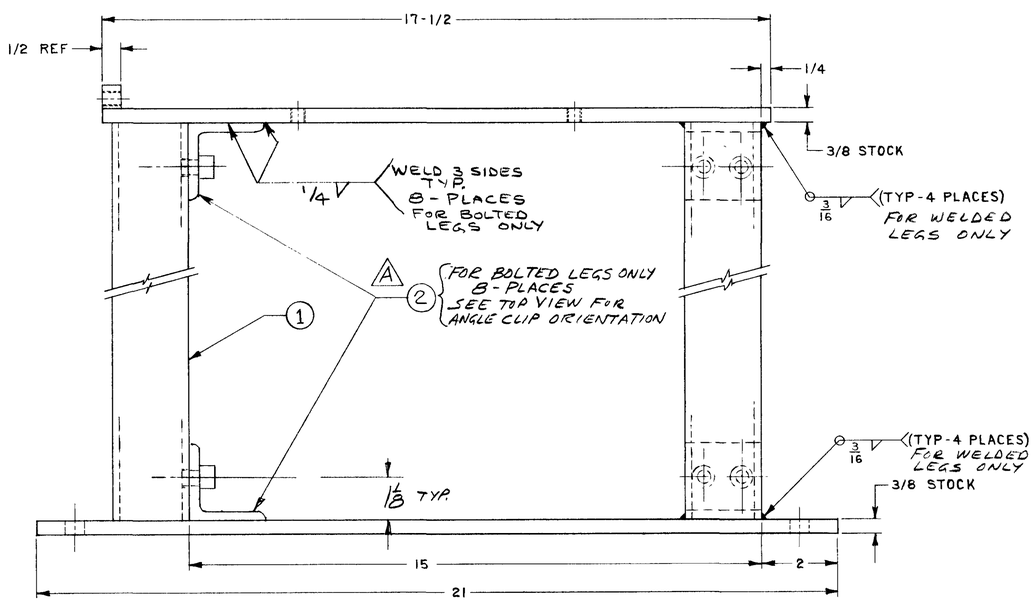

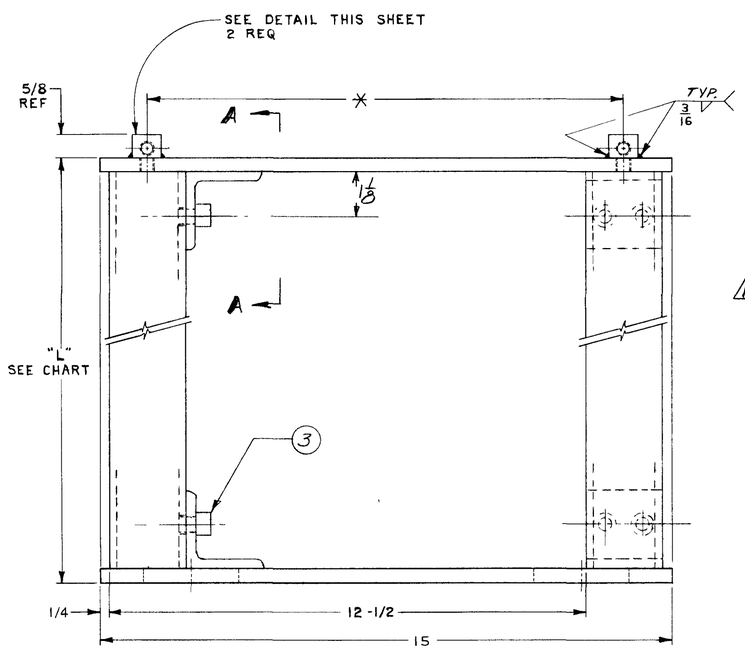

ITEM NO.	PART NO.	DESCRIPTION OR SIZE	QTY. REQ.
3	COMML.	3/8-16 UNC-2A SOCKET HEAD CAP SCREW x 3/4 LG	16
2	COMML.	ANGLE, STRUCT STEEL ASTM A36 2"x2"x1/4	AS REQ'D
1		2x2x.187 WALL STRUCTURAL TUBE, ASTM A 500 GR. B	AS REQ

A BOLTED LEGS ONLY

PARTS LIST

UNLESS OTHERWISE SPECIFIED			ORIGINATOR	F. LANGE	
FRACTIONS	DECIMALS	ANGLES	DRAWN	J. EDWARDS	1-31-85
± 1/32	± .005	± ∼	CHECKED	F. Lange	2-4-85
			APPROVED		

1. BREAK ALL SHARP EDGES 1/64 MAX.
2. DO NOT SCALE DWG.
3. DIMENSIONING IN ACCORD WITH ANSI Y14.5 STD's.

√ MAX. ALL MACHINED SURFACES

USED ON MD-188081

MATERIAL- STL 1010-1020 & AS NOTED

FERMI NATIONAL ACCELERATOR LABORATORY
UNITED STATES DEPARTMENT OF ENERGY

TEV 1
AP-1,2,3 SEMS
STAND

SCALE	FILMED	DRAWING NUMBER	REV.
1:2		2214-MD-188080	A

BRUNING-40-107