| REV. | DESCRIPTION | DRAWN | DATE |
|---|---|---|---|
| | | APPD. | DATE |

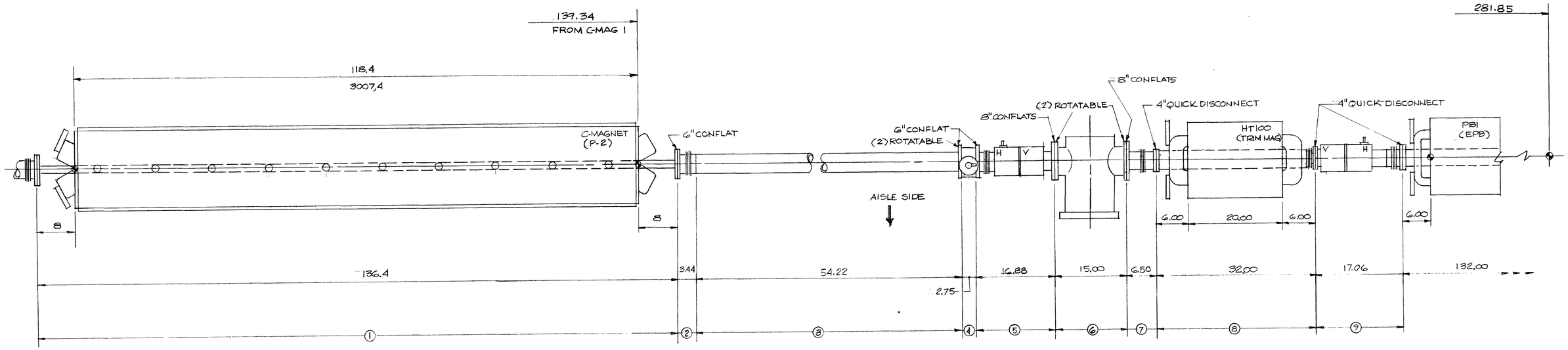


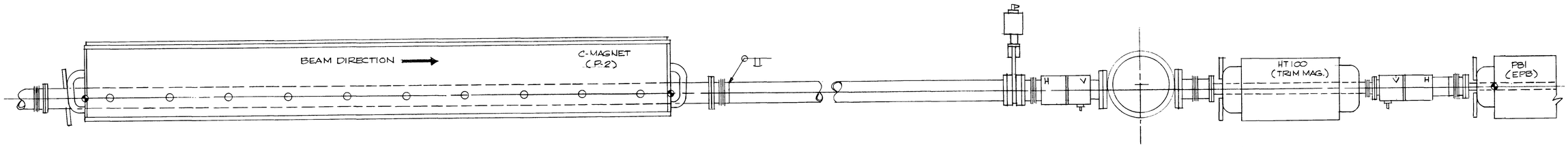


UNLESS OTHERWISE NOTED
XX.X-INCHES
XX.X-MILLIMETRES

NOTE!
WATER & POWER LINES LOCATED UPSTREAM FROM MAGNETS & ON OPPOSITE SIDE OF TUNNEL WALL

| ITEM NO. | PART NO. | DESCRIPTION OR SIZE | QTY. REQ. |
|---|---|---|---|
| 9 | | DBL. PICK-UP W/ BELLOWS & (2) FLG'S | 1 |
| 8 | | TRIM DIPOLE ASSY. W/ BELLOWS | 1 |
| 7 | | BELLOWS & (2) FLG'S. ASSY. | 1 |
| 6 | | SEM INSTRUM. TEE ASSY | 1 |
| 5 | | DBL. PICK-UP ASSY. W/ (2) FLG'S. | 1 |
| 4 | | VAT 100 VALVE ASSY. | 1 |
| 3 | | 4" O.D. S.S. TUBING & FLG. ASSY | 1 |
| 2 | | BELLOWS & FLANGE ASSY. | 1 |
| 1 | | C-MAGNET ASSY. | 1 |

PARTS LIST

| UNLESS OTHERWISE SPECIFIED | | | ORIGINATOR | GLENN LEE | 11-9-84 |
|---|---|---|---|---|---|
| FRACTIONS | DECIMALS | ANGLES | DRAWN | R. THOMPSON | 11-9-84 |
| ± | ± | ± | CHECKED | | |
| 1. BREAK ALL SHARP EDGES 1/64 MAX. | | | APPROVED | | |
| 2. DO NOT SCALE DWG. | | | USED ON | | |
| 3. DIMENSIONING IN ACCORD WITH ANSI Y14.5 STD's. | | | | | |
| 7 MAX. ALL MACHINED SURFACES | | | MATERIAL- | | |

FERMI NATIONAL ACCELERATOR LABORATORY
UNITED STATES DEPARTMENT OF ENERGY

TEV I - VACUUM TRANSFER LINES - AP-1

C-MAGNET (P-2) TO PBI (EPB)

| SCALE | FILMED | DRAWING NUMBER | REV. |
|---|---|---|---|
| 1/8" = 1" | | 8000-ME 216181 | |