REV.	DESCRIPTION	DRAWN	DATE
		APPD.	DATE

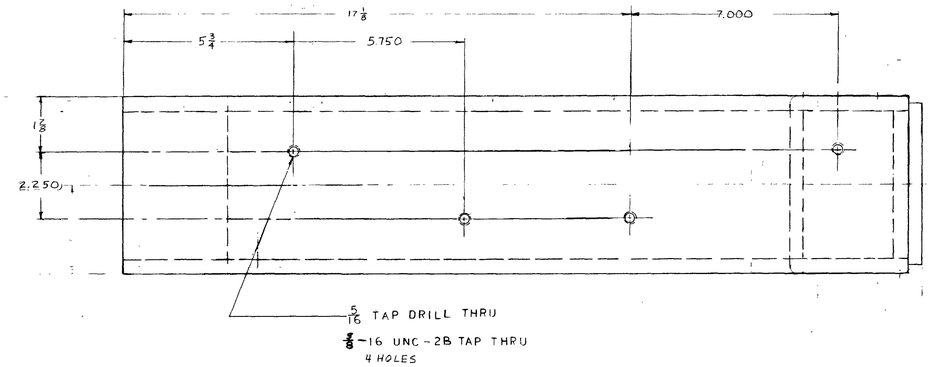

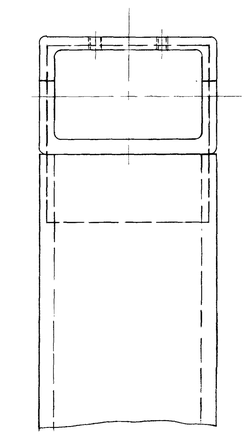

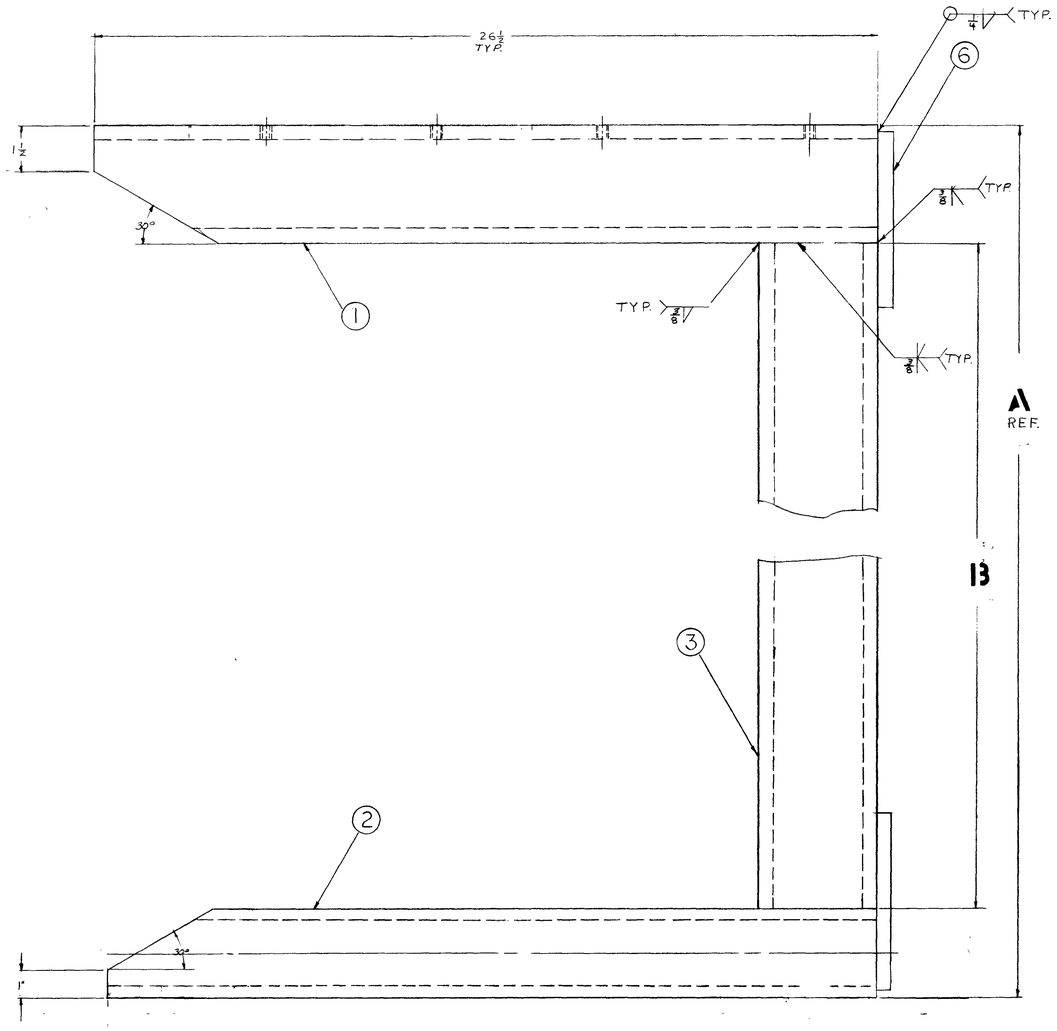

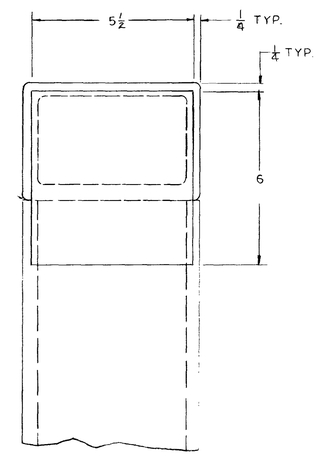

STAND NUMBER	A	B
1	31 1/4	24 1/4
2	29 5/8	22 5/8
3	28 1/8	21 1/8
4	26 1/2	19 1/2

ITEM NO.	PART NO.	DESCRIPTION OR SIZE	QTY. REQ. (per stand)
6	———	6 X 5 1/2 X 1/2 HRS	2
5	———	ELIMINATED	—
4	———	ELIMINATED	—
3	LENGTH VARIES SEE TABLE	6 X 4 X 1/2 STEEL TUBE	1
2	———	6 X 3 X 3/8 STEEL TUBE	1
1	———	6 X 4 X 1/2 STEEL TUBE	1

PARTS LIST

UNLESS OTHERWISE SPECIFIED					
FRACTIONS	DECIMALS	ANGLES	ORIGINATOR		
± 1/16	± .020	± 1°	DRAWN	C. Schneidinger	4/6/84
			CHECKED		
			APPROVED		

1. BREAK ALL SHARP EDGES 1/64 MAX.
2. DO NOT SCALE DWG.
3. DIMENSIONING IN ACCORD WITH ANSI Y14.5 STD'S.

√ MAX. ALL MACHINED SURFACES

USED ON

MATERIAL-

FERMI NATIONAL ACCELERATOR LABORATORY
UNITED STATES DEPARTMENT OF ENERGY

MAIN RING
F17 C-MAGNET STAND
"C" STAND ASSEMBLY

SCALE	FILMED	DRAWING NUMBER	REV.
HALF		8000-ME-119365	