REV.	DESCRIPTION	DRAWN / APPD.	DATE / DATE
A	DESIGN CHANGE	D.S.	6-20-84
B	ADDED	D.S.	10-30-84

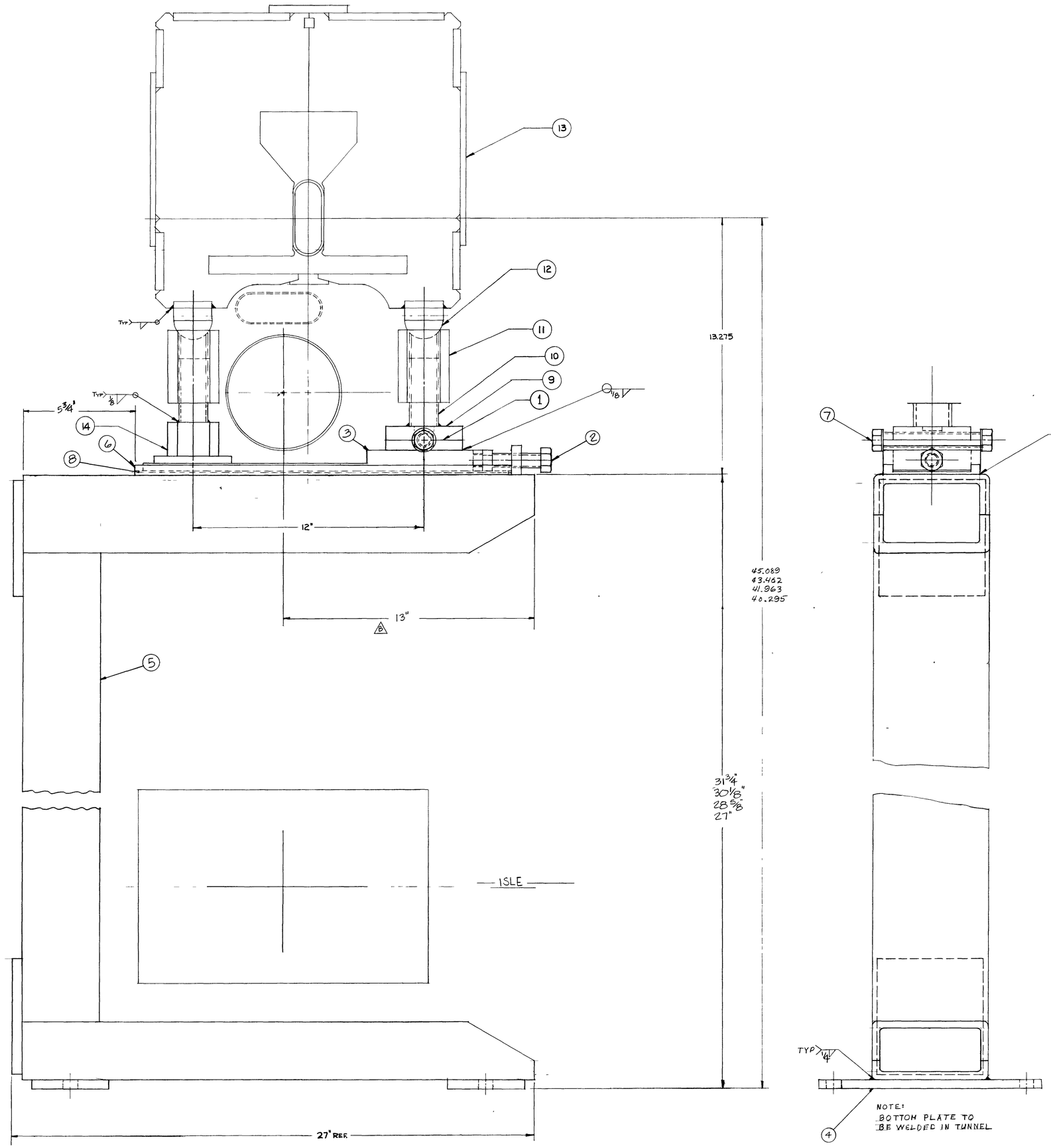

PER MAGNET

ITEM NO.	PART NO.	DESCRIPTION OR SIZE	QTY. REQ.
14	MB-119319	HEX BLOCK	2
13	———	F17 "C" MAGNET	1
12	0426-MB-1261	UPPER SPHERICAL PAD	4
11	MC-119316	ADJUSTMENT NUT	4
10	MB-119320	HEIGHT ADJUSTMENT SCREW	4
9	MC-119313	WIDE TOP SLIDE	2
8	MC-119367	DU GLACIER PLATE	2
7	0428-MB-107484	ROD WITH NUTS	2
6	MD-119369	HORIZ. SLIDE GUIDE	2
5	ME-118365	"C" STAND ASSEMBLY	2
4	MC-119366	"C" STAND BOTTOM PLATE	4
3	MD-119368	HORIZONTAL SLIDE	2
2	MB-187409	HORIZ. ADJUST. SCREW	2
1	0428-MC-107408	BOTTOM SLIDE FOR SCREWS	2

PARTS LIST

UNLESS OTHERWISE SPECIFIED			ORIGINATOR		
FRACTIONS	DECIMALS	ANGLES	DRAWN	A. HAUTZINGER	1 3 84
± ~	± ~	± ~	CHECKED		
1. BREAK ALL SHARP EDGES 1/64 MAX.			APPROVED		
2. DO NOT SCALE DWG.			USED ON		
3. DIMENSIONING IN ACCORD WITH ANSI Y14.5 STD's.			MATERIAL-		
✓ MAX. ALL MACHINED SURFACES					

FERMI NATIONAL ACCELERATOR LABORATORY
UNITED STATES DEPARTMENT OF ENERGY

MAIN RING
F17 "C" MAGNET STAND
ASSEMBLY

SCALE	FILMED	DRAWING NUMBER	REV.
HALF		8000-ME-119311	B

BRUNING: 40 107