REV.	DESCRIPTION	DRAWN / APPD.	DATE / DATE
A	MISC. CHANGES		11-24-86
B	UPDATED		12-10-86
C	UPDATED		8-13-87
D	DIGITIZED		12-90
E	ADDED COLLIMATOR AND UPDATED	G.WAVER	9-15-92
F	UPDATED	K.OBRIEN	9-19-95
G	UPDATED FOR 1999 FIXED TARGET RUN	B.POPPER / RER	8-1-99 / 3-22-00
H	UPDATED FOR 2000 ENGINEERING RUN	B.POPPER / RER	3-22-00 / 3-22-00
I	UPDATED FOR COLLIDER RUN 2	B.POPPER	3-22-00

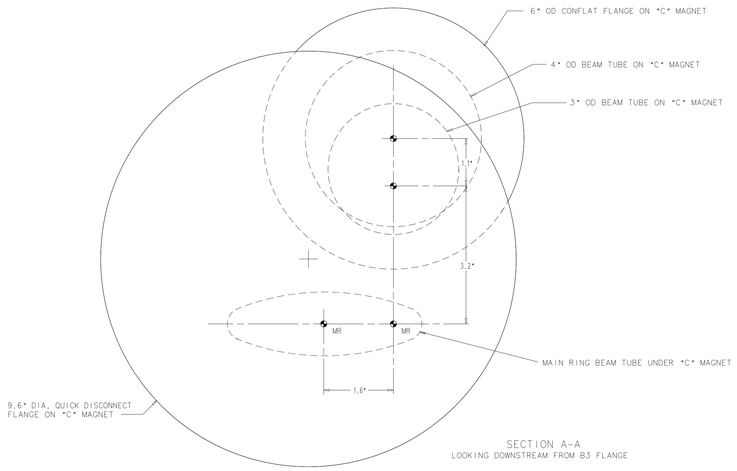

SECTION A-A
LOOKING DOWNSTREAM FROM B3 FLANGE

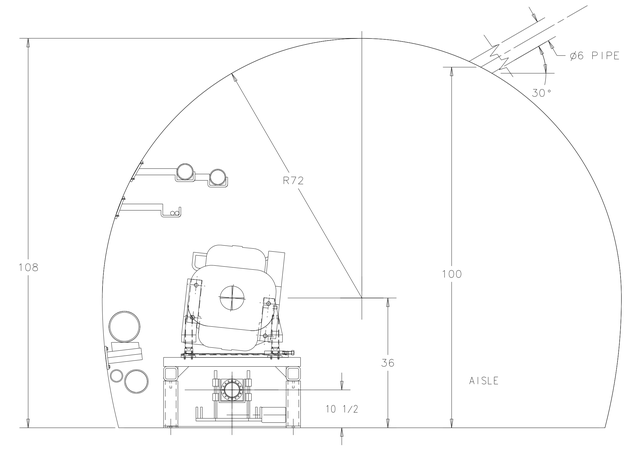

SECTION B-B
SCALE=1/8

ROUGHING PORT

PIRANI AND LOCAL SPARE HEAD

DIODE ION PUMP

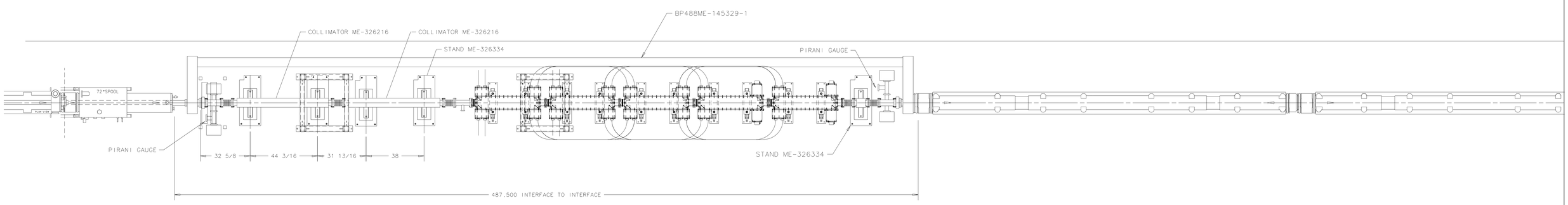

PLAN VIEW OF TEV LINE

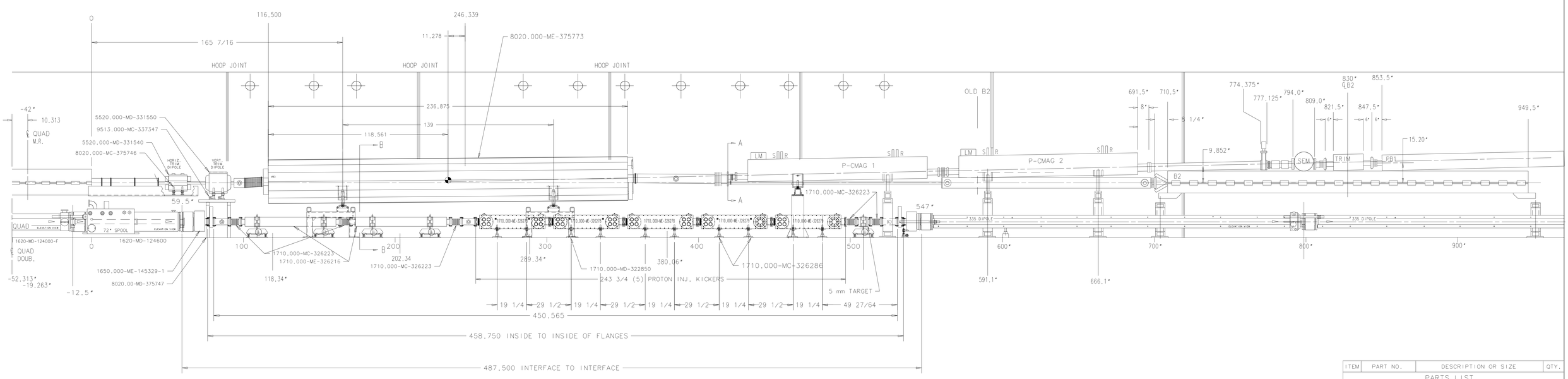

ITEM	PART NO.	DESCRIPTION OR SIZE	QTY.

PARTS LIST

UNLESS OTHERWISE SPECIFIED			ORIGINATOR		
			DRAWN	D.SCHMITT	11/1/90
±	±	±	CHECKED		
			APPROVED		
			USED ON		
			MATERIAL		

1. BREAK ALL SHARP EDGES 1/64 MAX.
2. DO NOT SCALE DRAWING.
3. DIMENSIONS BASED UPON ANSI Y14.5M-1982
4. MAX. ALL MACH. SURFACES

FERMI NATIONAL ACCELERATOR LABORATORY
UNITED STATES DEPARTMENT OF ENERGY

ENERGY DOUBLER
MEDIUM STRAIGHT
F17

SCALE	FILMED	DRAWING NUMBER	REV.
1/2"=1'		1780.000-ME-119604	I

CREATED WITH I-DEAS_VI | USER NAME:DSCHMITT

NOTICE: IMAGE OBTAINED FROM FERMILAB WEB SITE
This information is provided for REFERENCE use only. Not for MANUFACTURE, or DESIGN INFORMATION. All information contained in this document represents work sponsored by an agency of the U.S. Government. Neither the U.S. Government nor any agency thereof, nor Universities Research Association, Inc., nor any of their employees or officers, makes any warranty, express or implied, or assumes any legal liability or responsibility for the accuracy, completeness, or usefulness of any information, apparatus, product or process disclosed, or represents that its use would not infringe privately owned rights.