REV.	DESCRIPTION	DRAWN	DATE
		APPD.	DATE

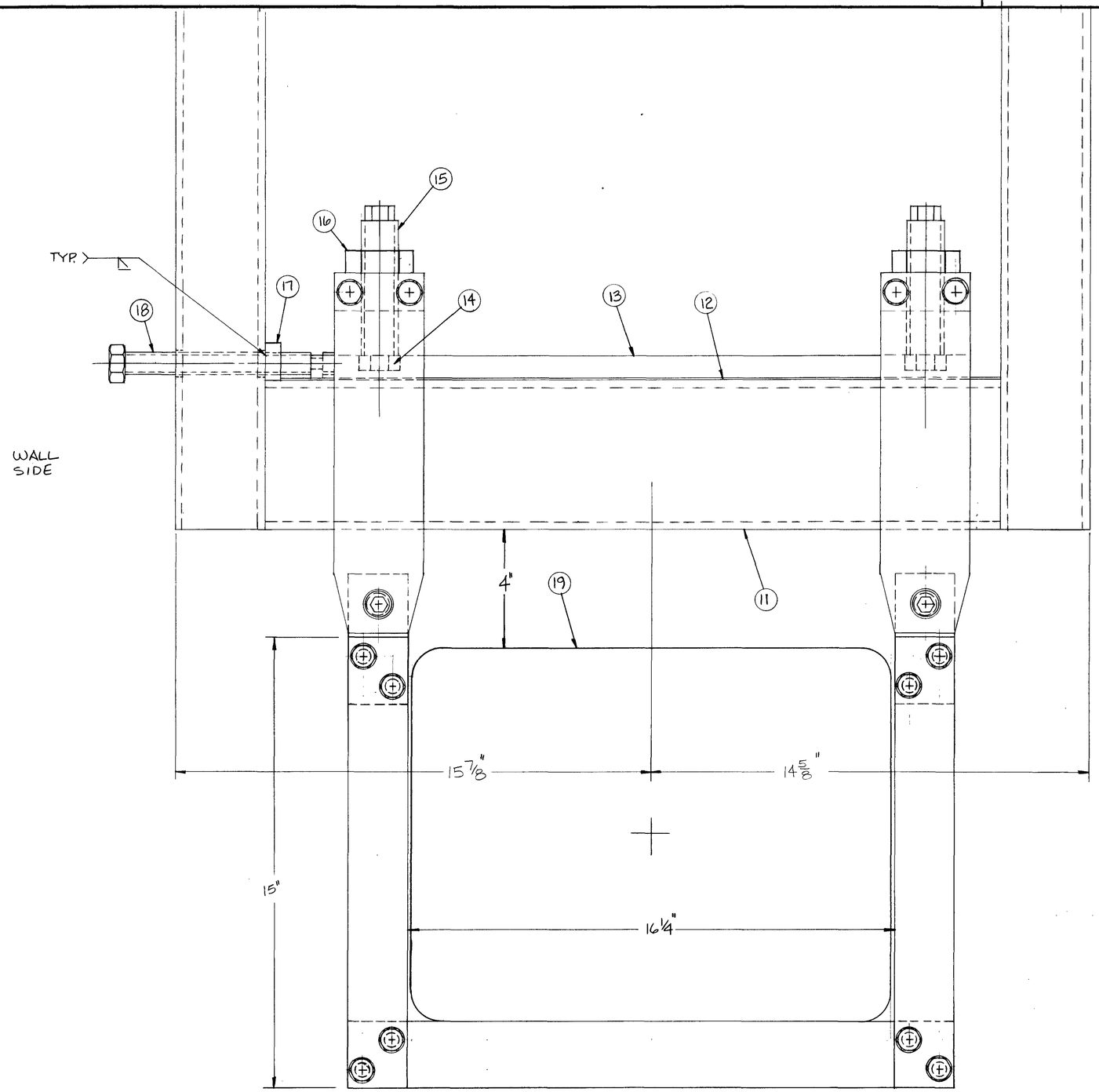

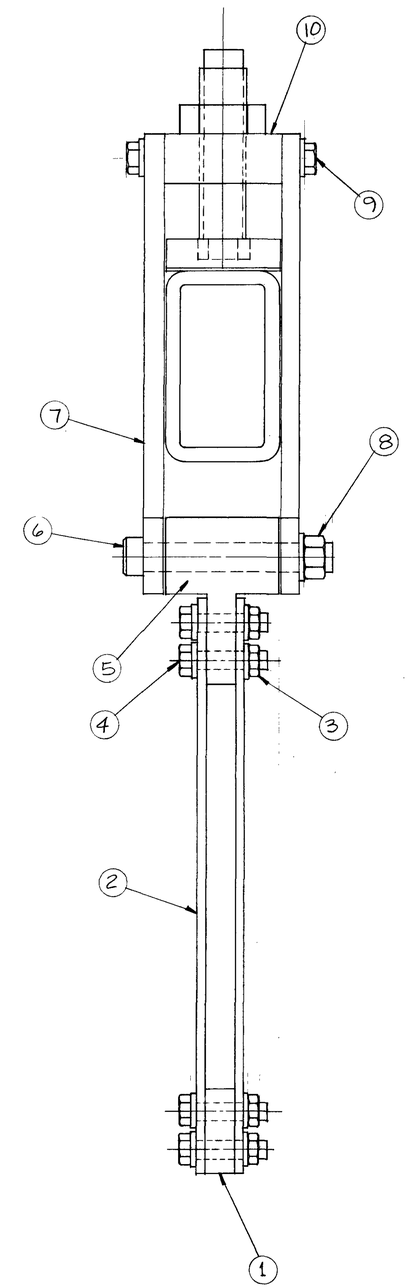

ITEM NO.	PART NO.	DESCRIPTION OR SIZE	QTY. REQ.
			PER STAND
19	———	PB 2 MAGNET	1
18	MB-119415	HORIZ. ADJ. SCREW	1
17	MB-119416	HORIZ. ADJ. BLOCK	1
16	MB-119404	ACME JAM NUT	2
15	MB-119402	ACME ADJ. SCREW	2
14	51203	FAG BALL THRUST BEARING	2
13	MC-119400	SLIDE BAR	1
12	MC-119417	DU GLACIER PLATE	1
11	MD-119420	CEILING BRACKET	1
10	MB-119403	ACME BLOCK	2
9	———	1/2-13 x 1 1/4 HEX. BOLT w/ LOCK WASHER	8
8	———	5/8-11 HEX. NUT w/ LOCK WASHER	2
7	MC-119412	PIVOT BLOCK HANGER	4
6	———	3/4" DIA. SHOULDER BOLT	2
5	MC-119401	PIVOT BLOCK	2
4	———	1/2-13 x 2" HEX. BOLT w/ LOCK WASHER	8
3	———	1/2-13 HEX. NUT w/ LOCK WASHER	8
2	MC-119413	CRADLE CONNECTING LINK	4
1	MC-119414	CRADLE BASE	1

PARTS LIST

UNLESS OTHERWISE SPECIFIED			ORIGINATOR		
FRACTIONS	DECIMALS	ANGLES	DRAWN	D. SCHMITT	9.5.84
±	±	±	CHECKED		
			APPROVED		

1. BREAK ALL SHARP EDGES 1/64 MAX.
2. DO NOT SCALE DWG.
3. DIMENSIONING IN ACCORD WITH ANSI Y14.5 STD's.

✓ MAX. ALL MACHINED SURFACES

USED ON

MATERIAL-

FERMI NATIONAL ACCELERATOR LABORATORY
UNITED STATES DEPARTMENT OF ENERGY

ANTIPROTON LINE
F18 STANDS
PB2 STAND ASSEMBLY

SCALE	FILMED	DRAWING NUMBER	REV.
HALF		8000-MD-119421	

BRUNING 40-107