REV.	DESCRIPTION	DRAWN	DATE
		APPD.	DATE

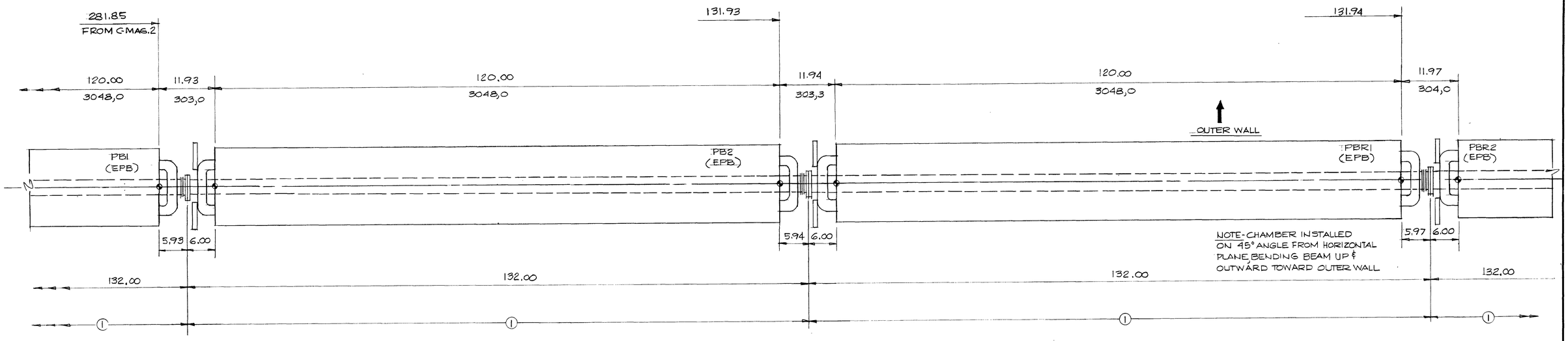

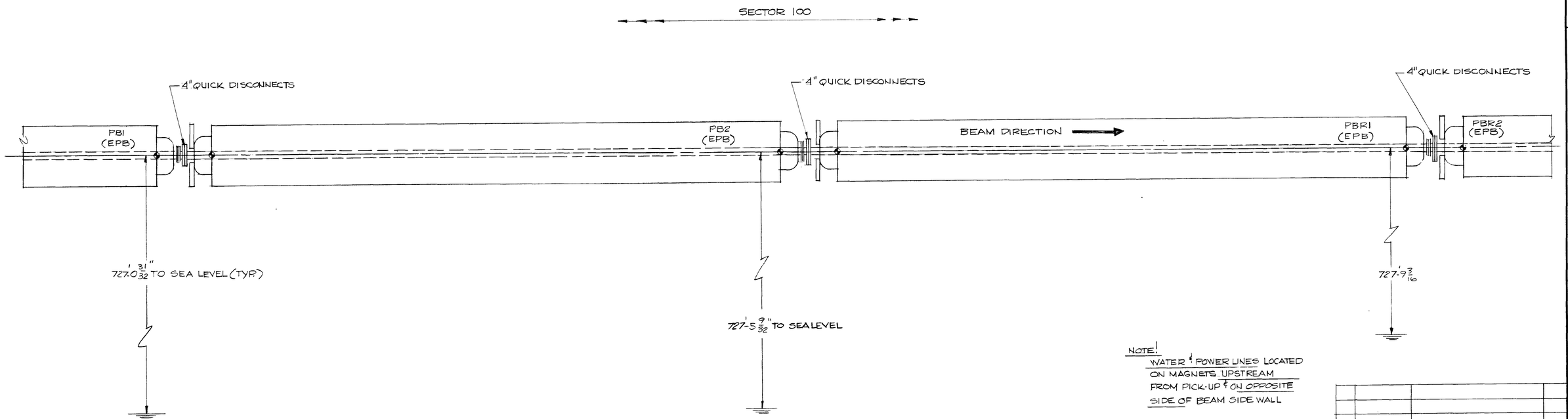

NOTE!
WATER & POWER LINES LOCATED ON MAGNETS UPSTREAM FROM PICK-UP & ON OPPOSITE SIDE OF BEAM SIDE WALL

UNLESS OTHERWISE NOTED:
XX.X - INCHES
XXX - MILLIMETRES

ITEM NO.	PART NO.	DESCRIPTION OR SIZE	QTY. REQ.
1	0621-ME 24568	EPB DIPOLE MAGNET	4

PARTS LIST

UNLESS OTHERWISE SPECIFIED			ORIGINATOR	GLENN LEE	10-16-84
FRACTIONS	DECIMALS	ANGLES	DRAWN	R. THOMPSON	10-16-84
±	±	±	CHECKED		
1. BREAK ALL SHARP EDGES 1/64 MAX.			APPROVED		
2. DO NOT SCALE DWG.			USED ON		
3. DIMENSIONING IN ACCORD WITH ANSI Y14.5 STD's.			MATERIAL-		
√ MAX. ALL MACHINED SURFACES					

FERMI NATIONAL ACCELERATOR LABORATORY
UNITED STATES DEPARTMENT OF ENERGY

TEV I - VACUUM TRANSFER LINE AP-1
DIPOLE PB1 (EPB) THRU
PBR2 (EPB)

SCALE	FILMED	DRAWING NUMBER	REV.
1/8 = 1"		8000-ME 216182	