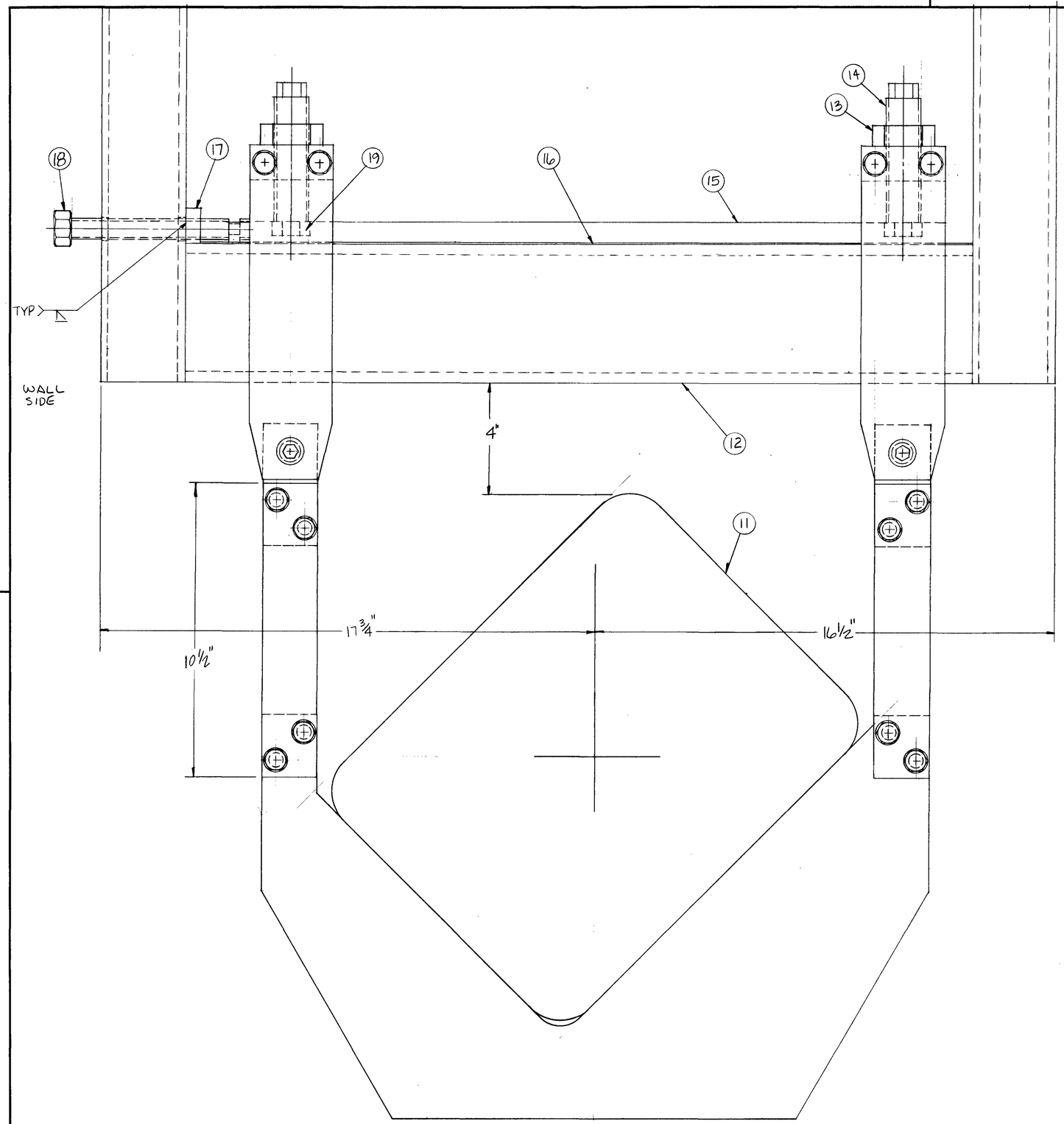

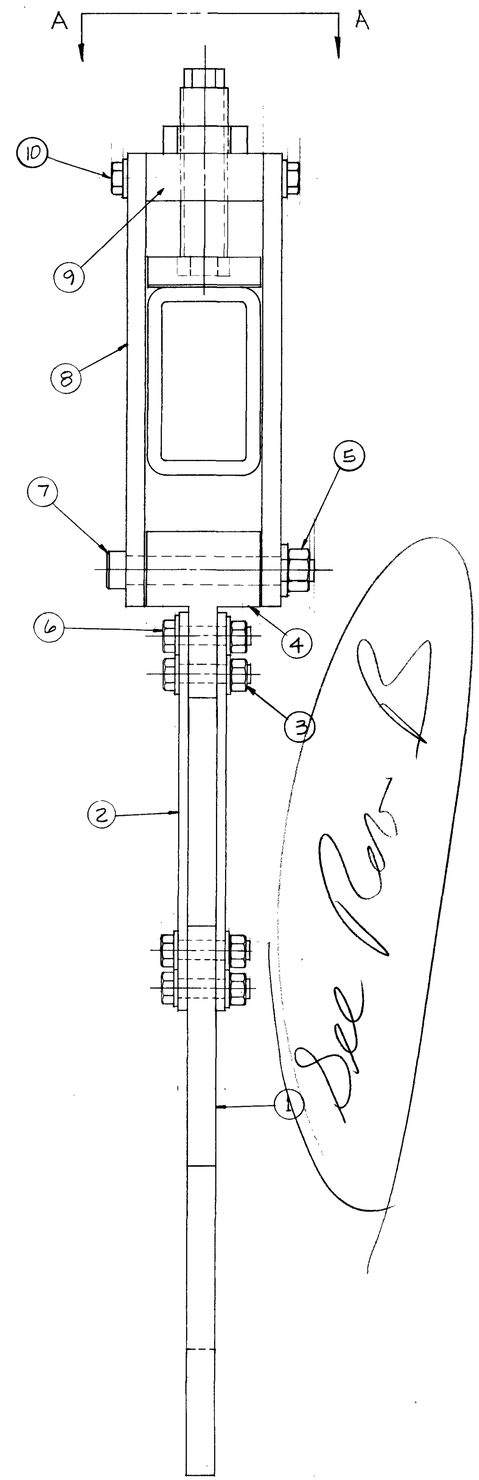

VIEW A-A
FULL SCALE

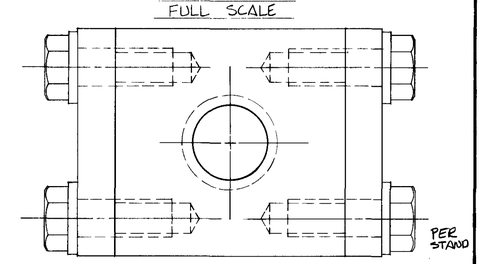

REV.	DESCRIPTION	DRAWN / APPD.	DATE / DATE
A	PUT MAGNET IN CORRECTLY	R SCHMITT	10-17-84

ITEM NO.	PART NO.	DESCRIPTION OR SIZE	QTY. REQ.
18	MB-119415	HORIZ. ADJ. SCREW	1
17	MB-119416	HORIZ. ADJ. BLOCK	1
16	MC-119417	DU GLACIER PLATE	1
15	MC-119400	SLIDE BAR	1
14	MB-119402	ACME ADJ. SCREW	2
13	MB-119404	ACME JAM NUT	2
12	MD-119420	CEILING BRACKET	1
11	———	PBR 1 + PBR 2	1
10	———	½-13 x 1¼ LG. HEX. BOLT w/ LOCK WASHER	8
9	MB-119403	ACME BLOCK	2
8	MC-119412	PIVOT BLOCK HANGER	4
7	———	¾" DIA. SHOULDER BOLT	2
6	———	½-13 x 2" HEX. BOLT w/ LOCK WASHER	8
5	———	⅝-11 HEX. NUT w/ LOCK WASHER	2
4	MC-119401	PIVOT BLOCK	2
3	———	½-13 HEX. NUT w/ LOCK WASHER	8
2	MC-119413	CRADLE CONNECTING LINK	4
1	MD-119411	45° MAGNET CRADLE	1
19	51203	FAG BALL THRUST BEARING	2

PARTS LIST

UNLESS OTHERWISE SPECIFIED					
FRACTIONS	DECIMALS	ANGLES	ORIGINATOR		
± —	± —	± —	DRAWN	D. SCHMITT	9-4-84
			CHECKED		
			APPROVED		

1. BREAK ALL SHARP EDGES 1/64 MAX.
2. DO NOT SCALE DWG.
3. DIMENSIONING IN ACCORD WITH ANSI Y14.5 STD's.

√ MAX. ALL MACHINED SURFACES

USED ON

MATERIAL-

FERMI NATIONAL ACCELERATOR LABORATORY
UNITED STATES DEPARTMENT OF ENERGY

ANTIPROTON LINE
F18 STANDS
PBR1 AND PBR2

SCALE	FILMED	DRAWING NUMBER	REV.
HALF		8000-MD-119422	A

BRUNING-40-107