REV.	DESCRIPTION	DRAWN	DATE
		APPD.	DATE

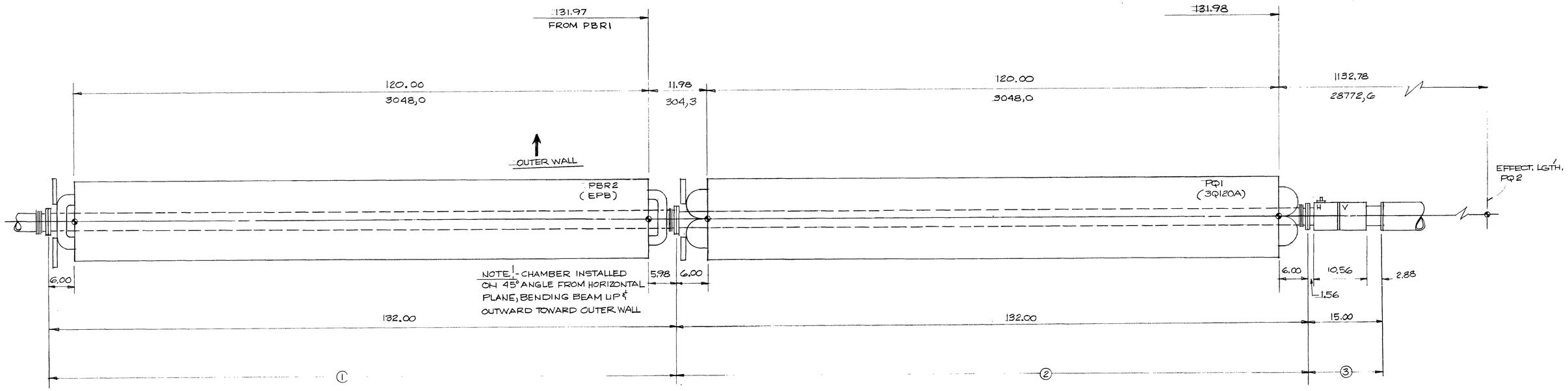

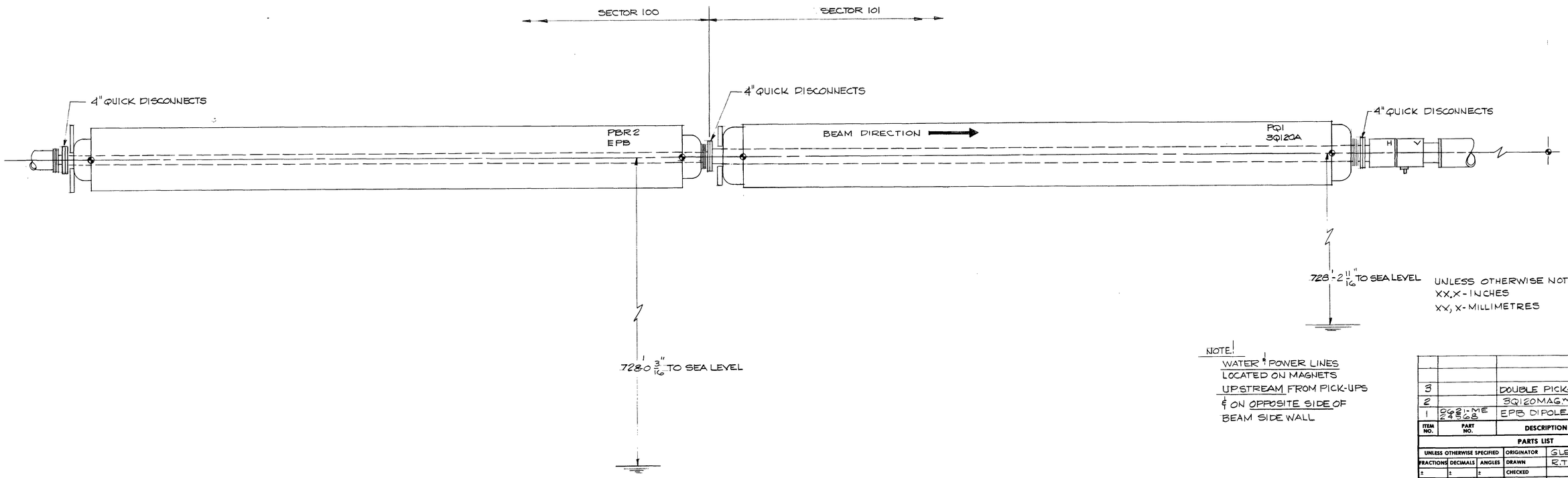

UNLESS OTHERWISE NOTED,
XX.X - INCHES
XX, X - MILLIMETRES

NOTE!
WATER & POWER LINES LOCATED ON MAGNETS UPSTREAM FROM PICK-UPS & ON OPPOSITE SIDE OF BEAM SIDE WALL

ITEM NO.	PART NO.	DESCRIPTION OR SIZE	QTY. REQ.
3		DOUBLE PICK-UP ASS'Y	1
2		3Q120 MAG'N DBL. PU'S	1
1	8000-ME 216185	EPB DIPOLE MAGNET	1

PARTS LIST

UNLESS OTHERWISE SPECIFIED			ORIGINATOR	GLENN LEE	10-17-84
FRACTIONS	DECIMALS	ANGLES	DRAWN	R. THOMPSON	10-17-84
±	±	±	CHECKED		
1. BREAK ALL SHARP EDGES 1/64 MAX.			APPROVED		
2. DO NOT SCALE DWG.			USED ON		
3. DIMENSIONING IN ACCORD WITH ANSI Y14.5 STD'S.					
√ MAX. ALL MACHINED SURFACES			MATERIAL-		

FERMI NATIONAL ACCELERATOR LABORATORY
UNITED STATES DEPARTMENT OF ENERGY

TEVI VACUUM TRANSFER LINE AP-1
DIPOLE PBR2 & QUAD. 3Q120A

SCALE	FILMED	DRAWING NUMBER	REV.
1/8" = 1"		8000-ME 216185	