REV.	DESCRIPTION	DRAWN	DATE
		APPD.	DATE

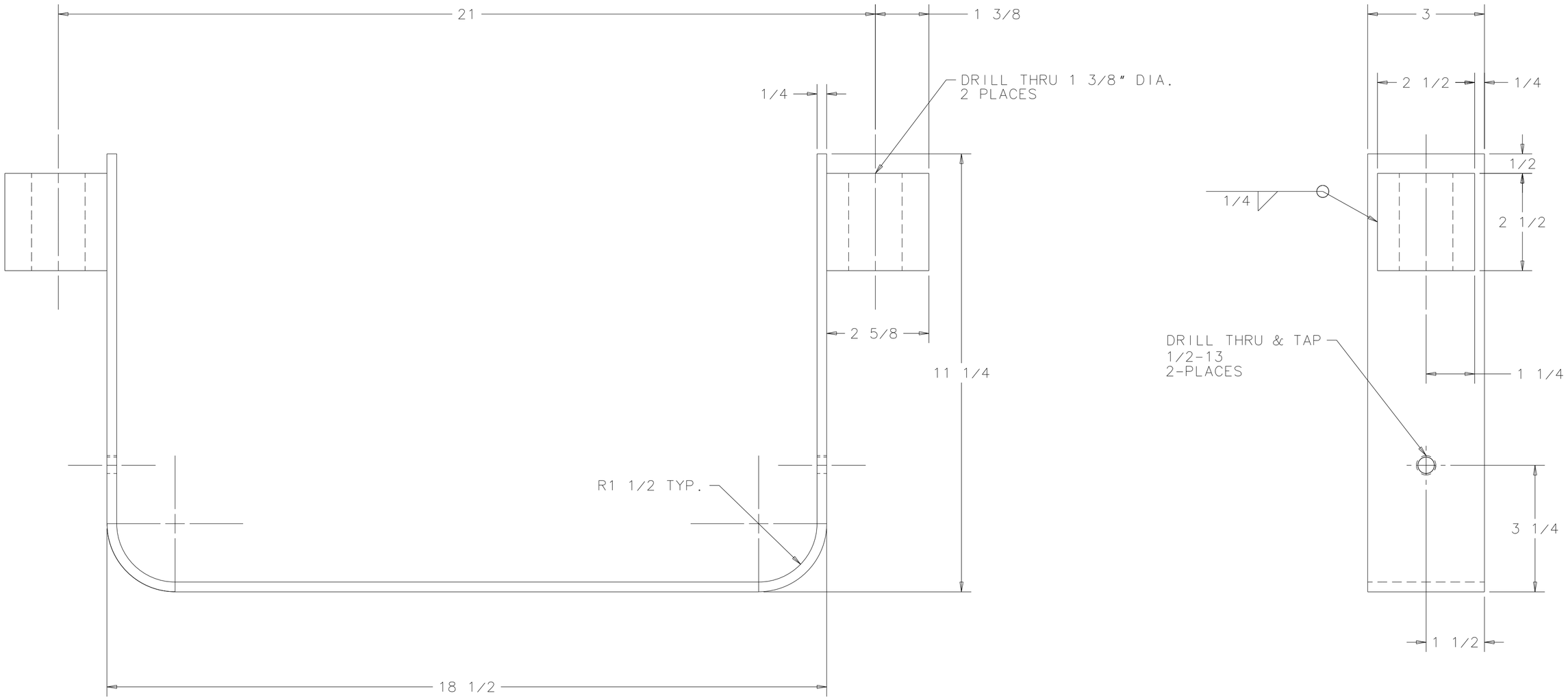

PAINT SURFACE BLACK

ITEM	PART NO.	DESCRIPTION OR SIZE	QTY.

PARTS LIST

UNLESS OTHERWISE SPECIFIED			ORIGINATOR	J.BIELICKI	08/27/99
DECIMALS	FRACTIONS	ANGLES	DRAWN	B.Popper	08/27/99
±.005	±1/64	±.5°	CHECKED		
			APPROVED		

1. BREAK ALL SHARP EDGES 1/64 MAX.
2. DO NOT SCALE DRAWING.
3. DIMENSIONS BASED UPON ANSI Y14.5M-1982
4. MAX. ALL MACH. SURFACES √

USED ON 8020.000-ME-375534

MATERIAL COLD ROLLED STEEL

FERMI NATIONAL ACCELERATOR LABORATORY
UNITED STATES DEPARTMENT OF ENERGY

PBAR PREVAULT AP1 3Q120 MAGNET SUPPORT REPLACEMENT SUPPORT

SCALE	FILMED	DRAWING NUMBER	REV.
1/2		8020.000-MC-375145	

CREATED WITH I-DEAS_VI | USER NAME: BPOPPER

NOTICE: IMAGE OBTAINED FROM FERMILAB WEB SITE

This information is provided for REFERENCE use only.
Not for MANUFACTURE, or DESIGN INFORMATION.
All information contained in this document represents work sponsored by an agency of the U.S. Government.
Neither the U.S. Government nor any agency thereof, nor Universities Research Association, Inc., nor any of their employees or officers, makes any warranty, express or implied, or assumes any legal liability or responsibility for the accuracy, completeness, or usefulness of any information, apparatus, product or process disclosed, or represents that its use would not infringe privately owned rights.

CADFILE: [PBAR_375] 375145