REV.	DESCRIPTION	DRAWN / APPD.	DATE / DATE
A	COMPLETE INFO ON ITEM #2 & CHGD 1¼-12 UNF THD TO 1"-8 UNC HEX NUT ALSO 8" CHGD TO 9" REF	J.A.E. / JAL	1-21-87 / 1-23-87

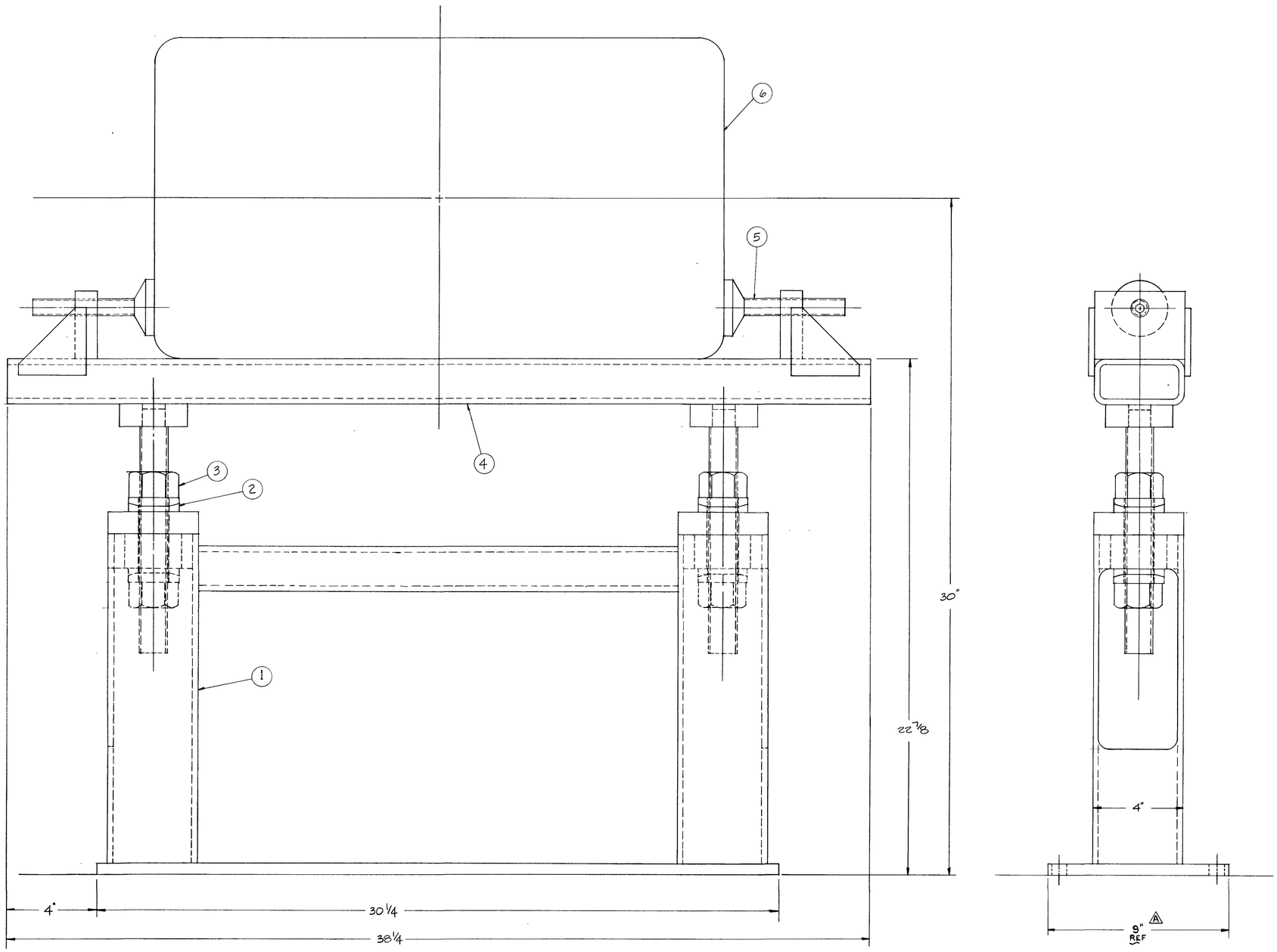

ITEM NO.	PART NO.	DESCRIPTION OR SIZE	QTY. REQ. (PER STAND)
6	———	MODIFIED B1 MAGNET	1
5	CL-6-JFL	CARR LANE JIG FEET	2
4	MD-187965	CRADLE	1
A 3	———	1"-8 UNC BRASS HEX. NUT	4
A 2		SPHERICAL WASHER, 1" BOLT SIZE, CARR LANE #CL-7-SW OR EQUAL	4
1	MD-187964	STAND BASE	1

PARTS LIST

UNLESS OTHERWISE SPECIFIED			ORIGINATOR		
FRACTIONS	DECIMALS	ANGLES	DRAWN	DENNIS SCHMITT	11-30-84
± —	± —	± —	CHECKED		
1. BREAK ALL SHARP EDGES 1/64 MAX.			APPROVED		
2. DO NOT SCALE DWG.			USED ON		
3. DIMENSIONING IN ACCORD WITH ANSI Y14.5 STD's.					
√ MAX. ALL MACHINED SURFACES			MATERIAL-		

FERMI NATIONAL ACCELERATOR LABORATORY
UNITED STATES DEPARTMENT OF ENERGY

STAND ASSEMBLY
MODIFIED B1 STAND-FLOOR
TEV. I

SCALE	FILMED	DRAWING NUMBER	REV.
		2214 -ME- 187966	A