REV.	DESCRIPTION	DRAWN	DATE
		APPD.	DATE

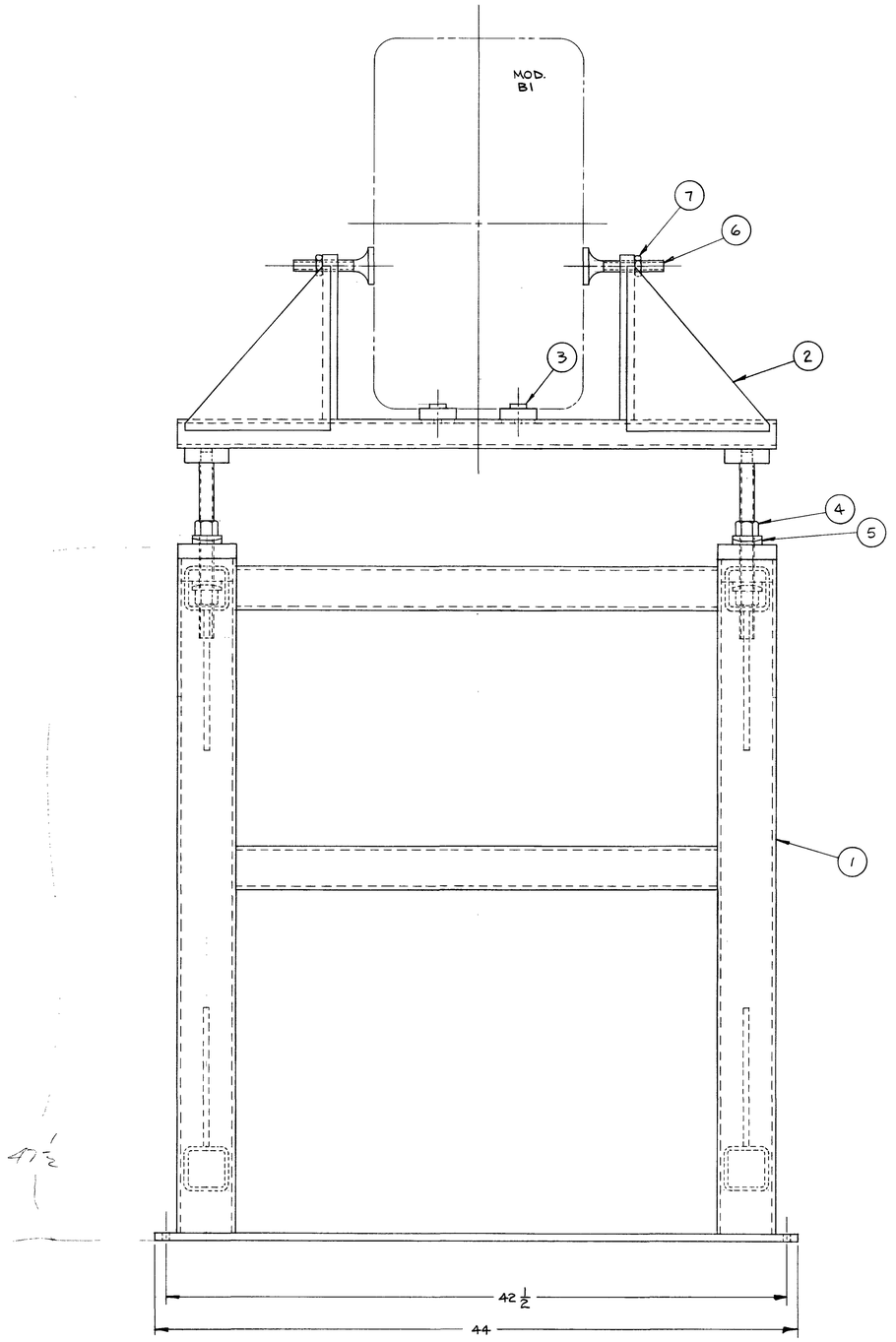

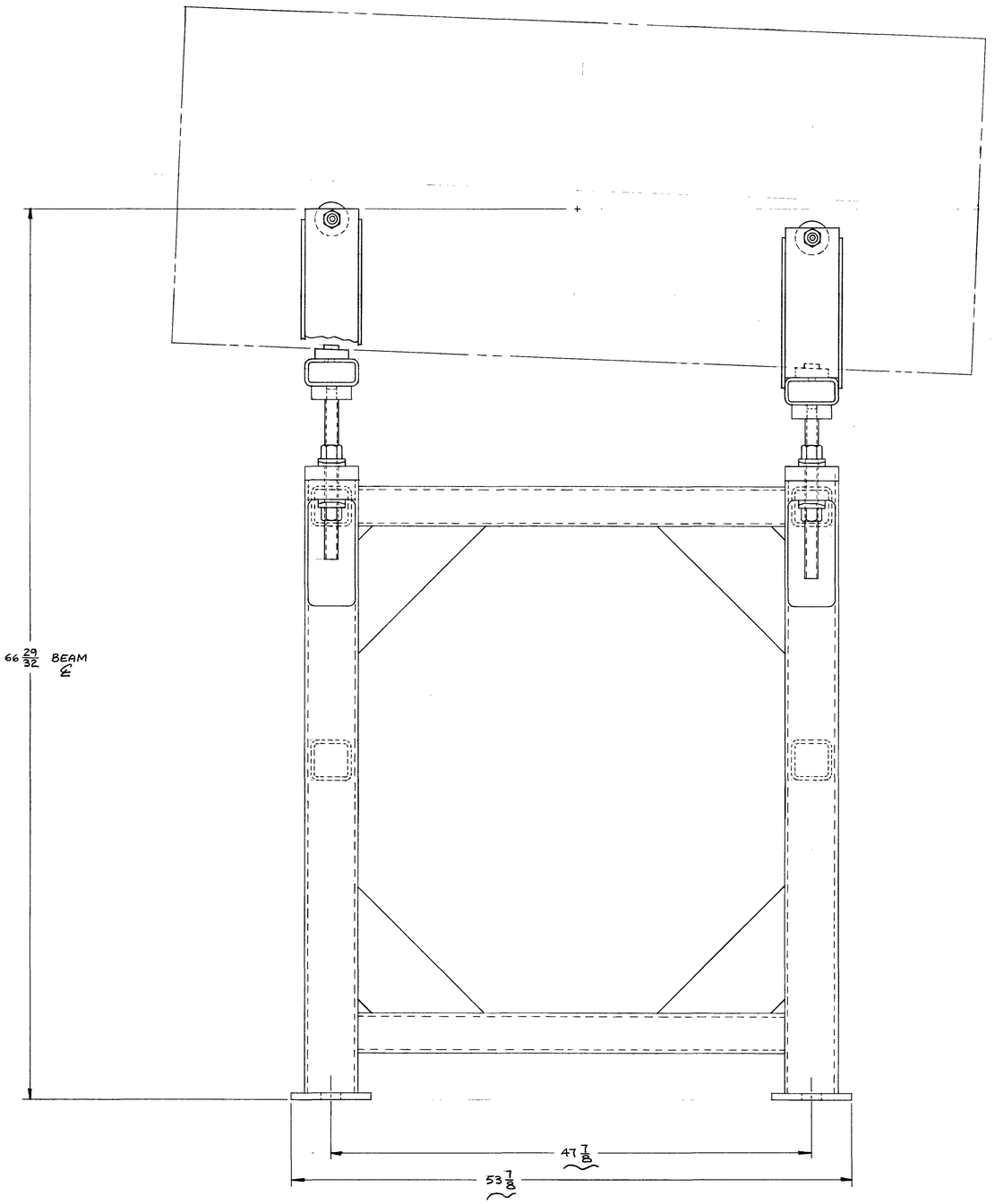

FERMILAB SUPPLIED

ITEM NO.	PART NO.	DESCRIPTION OR SIZE	QTY. REQ.
7		1-8UNC JAM HEX NUT STL	4
6	CARR LANE #CC-6-JFL	JIG FEET LEVELING	4
5	IND. SUPPLY 41109	SPHERICAL WASHER 1" SIZE	8
4		1-8UNC BRASS HEX NUT	8
3	MB-188362	PAD-SLIDING	4
2	MD-188360	CRADLE	2
1	MD-188361	STAND BASE	1

PARTS LIST

UNLESS OTHERWISE SPECIFIED			ORIGINATOR	J. MISEK	
FRACTIONS	DECIMALS	ANGLES	DRAWN	S. WESSELN	11-12-85
± 1/160	±	±	CHECKED		
1. BREAK ALL SHARP EDGES 1/64 MAX.			APPROVED		
2. DO NOT SCALE DWG.			USED ON		
3. DIMENSIONING IN ACCORD WITH ANSI Y14.5 STD's.			MATERIAL-		
√ MAX. ALL MACHINED SURFACES					

FERMI NATIONAL ACCELERATOR LABORATORY
UNITED STATES DEPARTMENT OF ENERGY

TEV I / AP-4
MODIFIED B1 STAND - FLOOR
STAND ASSEMBLY

SCALE	FILMED	DRAWING NUMBER	REV.
1:4		2214-ME-188359	